GT5 base plate with interface for zero point clamping system

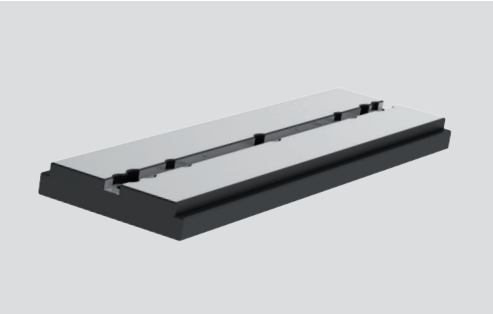

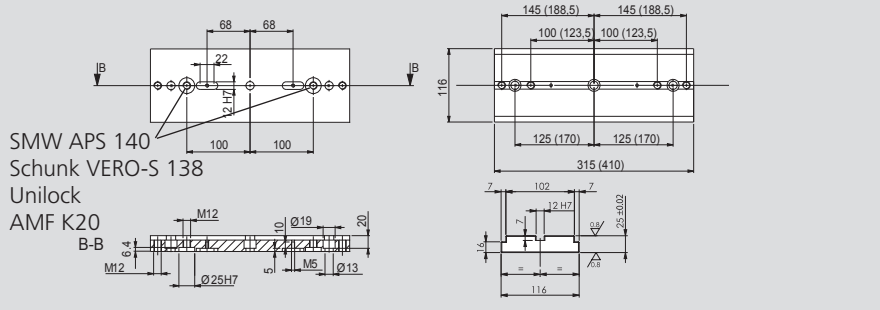

Type	Id. No.
GT5 100 base plate	58502010
GT5 200 base plate	58502020

GT5 top jaws for clamping inserts SinterGrip

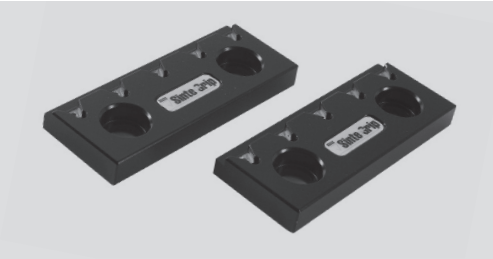

Set consisting of 2 pieces
top jaws for SinterGrip

SinterGrip
Page 116

Type	Id. No.
Top jaws SinterGrip	58451519

GT5 top jaws smooth / serrated

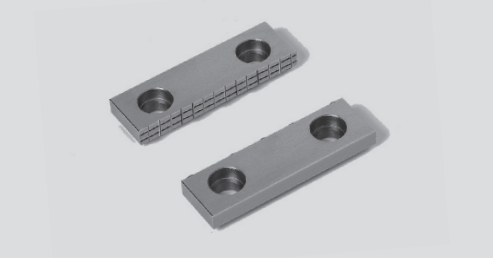

Smooth and serrated
Set consisting of 2 pieces
top jaws serrated and smooth

Type	Id. No.
Top jaws smooth / serrated	58504119

GT5 torque wrench

For precise adjustment of the clamping force of the GT5

Type	Id. No.
Torque wrench	51501006